SOLAR BOREHOLE RANGE

HR & HRI



VEGA PUMPS

DO IT RIGHT

24-01

BOREHOLE DC SOLAR
Pumps HR(SS304) & HRI(SS201) (3”)

The HR & HRI solar borehole range are manufactured with a permanent magnet, brush-less motor technology that generates better efficiency and performance. This product is ideal for application in remote areas with limited or unreliable power supply. The compact and lightweight design, ensures that these units are suitable for mobile applications.

Product Feature:

- Permanent magnet, brush-less motor, saving energy and offering maximum efficiency.
- NSK bearing with alloy mechanical seal.
- Intelligent water shortage protection.
- MPPT function offers higher utilization rate of solar energy.
- Automatic Stop | Start.
- Soft start protection.
- Over current protection.
- Max Water Submersion Depth : 20m on 210W model
  40m on a 300-500W model
  50m on a 750-1200W model
- Max Flow: 1600L/h
- Pump Isolation IP68
  Motor Speed 500 - 4000rpm
  Discharge 20mm
  Power` 210 - 1200watt
  Voltage DC24 - DC72

Application:

Suitable for installations in boreholes, wells, rivers, dams and tanks with minimum ID Ø 80mm.

Working Conditions:

- Non-corrosive water with a volume ratio of sand content not exceeding 1% and the particle size not exceeding 0.2mm.
- HRI Series not recommended for brackish water.
- Max pumped liquid temperature: 40°C
- PH capability: 6.5 - 8.5
- Max control box temperature: 60°C

Technical Summary:

MODEL	DC MOTOR VOLTAGE (V)	MAX INPUT DC V.O.C (V)	MAX INPUT AMPERAGE	POWER (WATT)	MAX FLOW (m^3/h)	MAX HEAD (m)	OUTLET (INCH)
3HRI210-80	24	48	17	210	1.6	80	3/4"
3HRI300-100	48	96	17	300	1.6	100	3/4"
3HRI500-120	48	96	17	500	1.6	120	3/4"

MODEL	DC MOTOR VOLTAGE (V)	MAX INPUT DC V.O.C (V)	MAX INPUT AMPERAGE	POWER (WATT)	MAX FLOW (m^3/h)	MAX HEAD (m)	OUTLET (INCH)
3HR210-80	24	48	17	210	1.6	80	3/4"
3HR300-100	48	96	17	300	1.6	100	3/4"
3HR500-120	48	96	17	500	1.6	120	3/4"
3HR750-140	72	144	17	750	1.6	140	3/4"
3HR1200-180	72	144	17	1200	1.6	180	3/4"

BOREHOLE DC SOLAR
Pumps HRI(SS201) 3”

Performance Data:

Please note that the performance table is for peak sunlight conditions at noon without any cloud cover and solar panels facing north at a 32° degree angle.

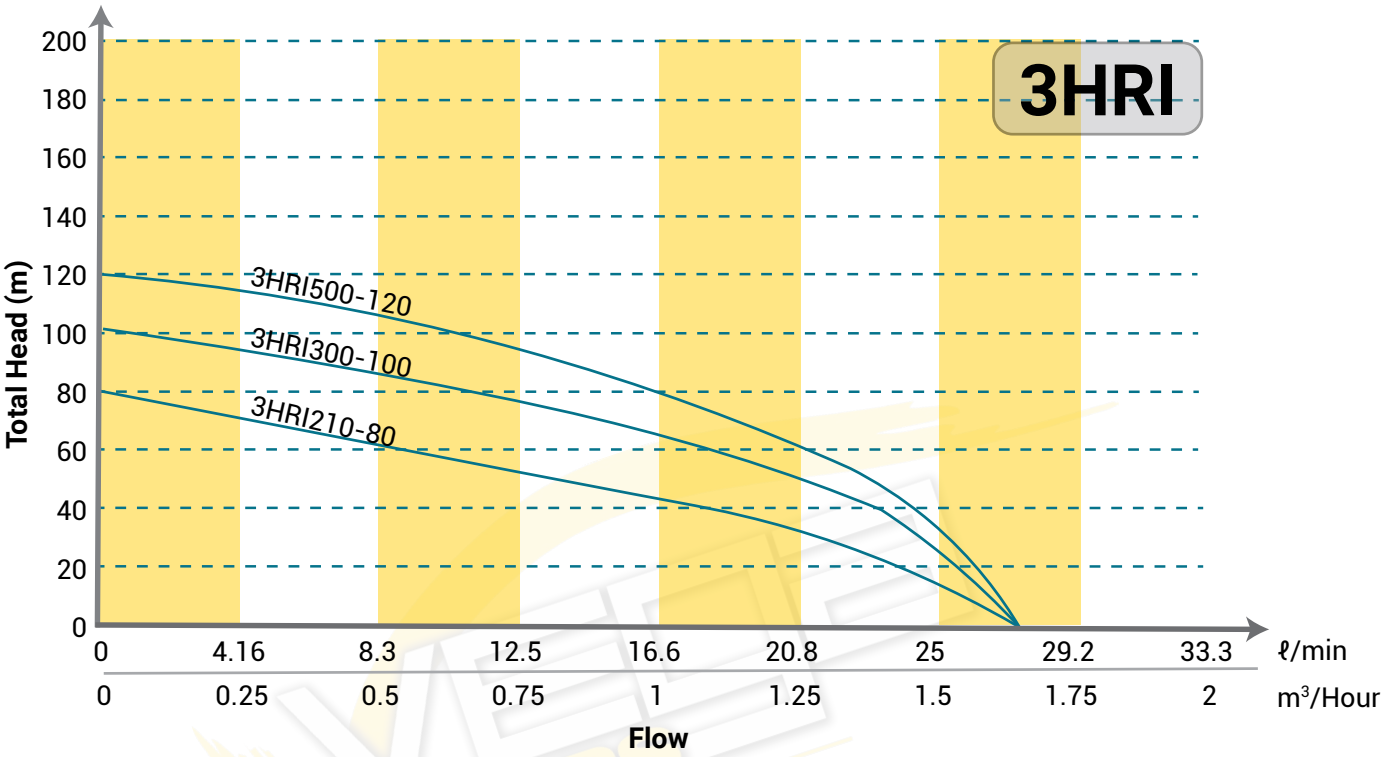

Model	Flow	ℓ/min	0	4.16	8.3	12.5	16.6	20.8	25	29.16
		l/hour	0	250	500	750	1000	1250	1500	1750
3HRI210-80	HEAD		80	75	65	55	43	30	18	0
3HRI300-100			100	95	85	78	65	45	27	0
3HRI500-120			120	110	105	90	75	60	30	0

Included in Kit:

PUMP & MOTOR	CONTROL BOX	PUMP PROBE	LEVEL PROBE	SWAGE NIPPLE	ROTOR SET	CLAMP
						
HEAT SHRINK	**HEAT SHRINK**	**SEALANT TAPE**	**PVC TAPE**	**THREAD TAPE**	**MOUNTING BOLTS**	**FUSE**
						
FERRULE	**SNAP HOOK**	**ALLEN KEY**	**LUG**	**SCREW DRIVER**	**BRACKET SCREWS**	**BRACKET**
						

BOREHOLE DC SOLAR

Pumps HRI(SS201) 3”

EXPLODED VIEW:

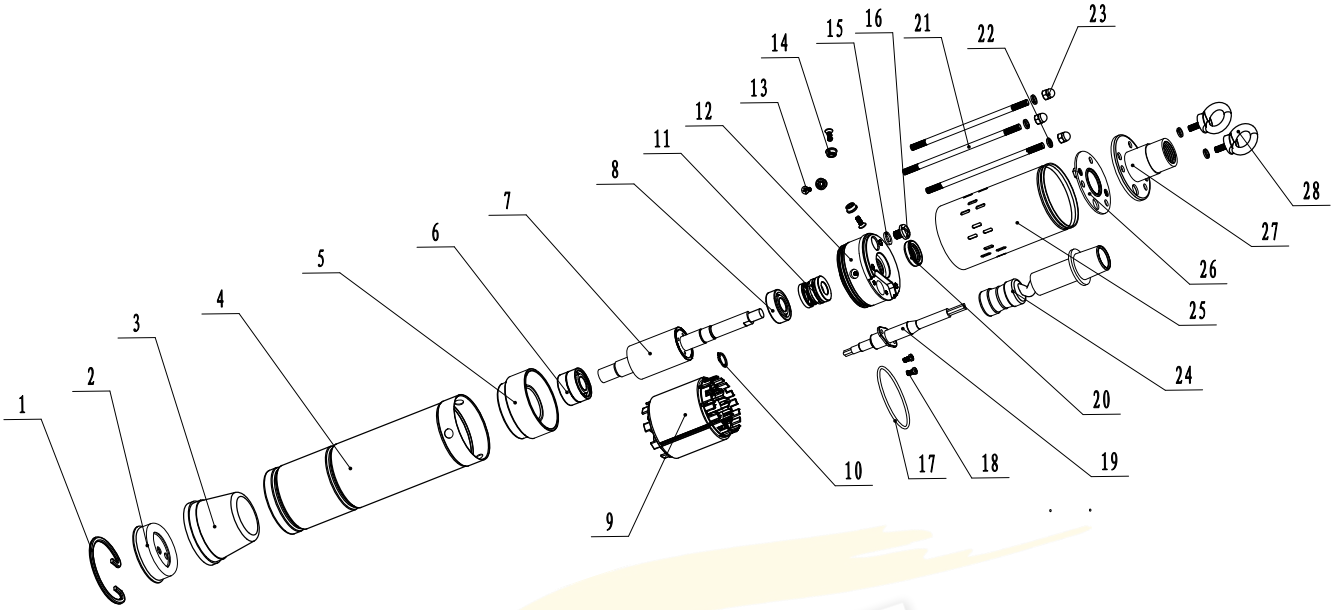

No	Part	Material	QTY	No	Part	Material	QTY
1	MOTOR BASE CIRCLIP	304SS	1	16	SCREW	SS304	1
2	MOTOR BASE	304SS	1	17	O RING	NBR	1
3	BLADDER	NBR	1	18	SCREW	SS304	1
4	MOTOR CASING	SS201	1	19	CABLE GLAND		1
5	BOTTOM CHUCK	ALU	1	20	OIL SEAL	NBR	2
6	BEARING	NSK	2	21	SCREW	SS304	1
7	ROTOR		1	22	SPRING WASHER	SS304	5
8	BEARING	NSK	1	23	SCREW	SS304	3
9	STATOR		1	24	HELICAL ROTOR		1
10	CIRCLIP		1	25	PUMP CASING	SS201	1
11	MECHANICAL SEAL	CAR/CER	1	26	COVER	SS201	1
12	OIL CYLINDER	SS201	1	27	OUTLET	SS201	1
13	SCREW	SS304	3	28	HANGER	SS201	1
14	SEAL RING	SS304	1				
15	GASKET	NBR	1				



3 HRI 210-80

- Max Head
- Watt
- Model SS201
- Pump Diameter

BOREHOLE DC SOLAR
Pumps HR (SS304) 3”

Performance Data:

Please note that the performance table is for peak sunlight conditions at noon without any cloud cover and solar panels facing north at a 32° degree angle.

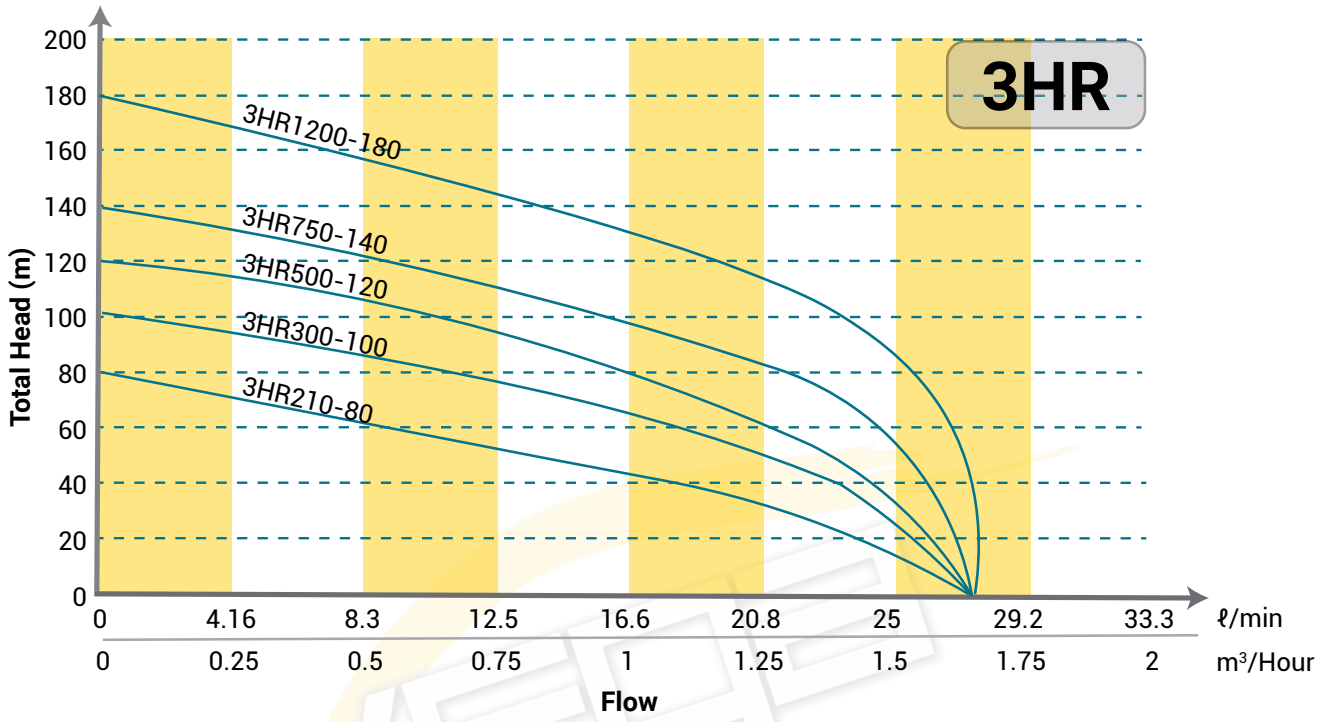

Model	Flow	ℓ/min	0	4.16	8.3	12.5	16.6	20.8	25	29.16	33.33
		l/hour	0	250	500	750	1000	1250	1500	1750	2000
3HR210-80	HEAD		80	75	61	50	42	31	19	0	
3HR300-100			100	95	85	78	65	50	28	0	
3HR500-120			120	110	105	95	80	60	35	0	
3HR750-140			140	130	120	110	95	85	55	0	
3HR1200-180			180	168	155	145	130	110	85	0	

Included in Kit:

PUMP & MOTOR	CONTROL BOX	PUMP PROBE	LEVEL PROBE	SWAGE NIPPLE	ROTOR SET	CLAMP
						
HEAT SHRINK	**HEAT SHRINK**	**SEALANT TAPE**	**PVC TAPE**	**THREAD TAPE**	**MOUNTING BOLTS**	**FUSE**
						
FERRULE	**SNAP HOOK**	**ALLEN KEY**	**LUG**	**SCREW DRIVER**	**BRACKET SCREWS**	**BRACKET**
						

BOREHOLE DC SOLAR

Pumps HR (SS304) 3”

EXPLODED VIEW:

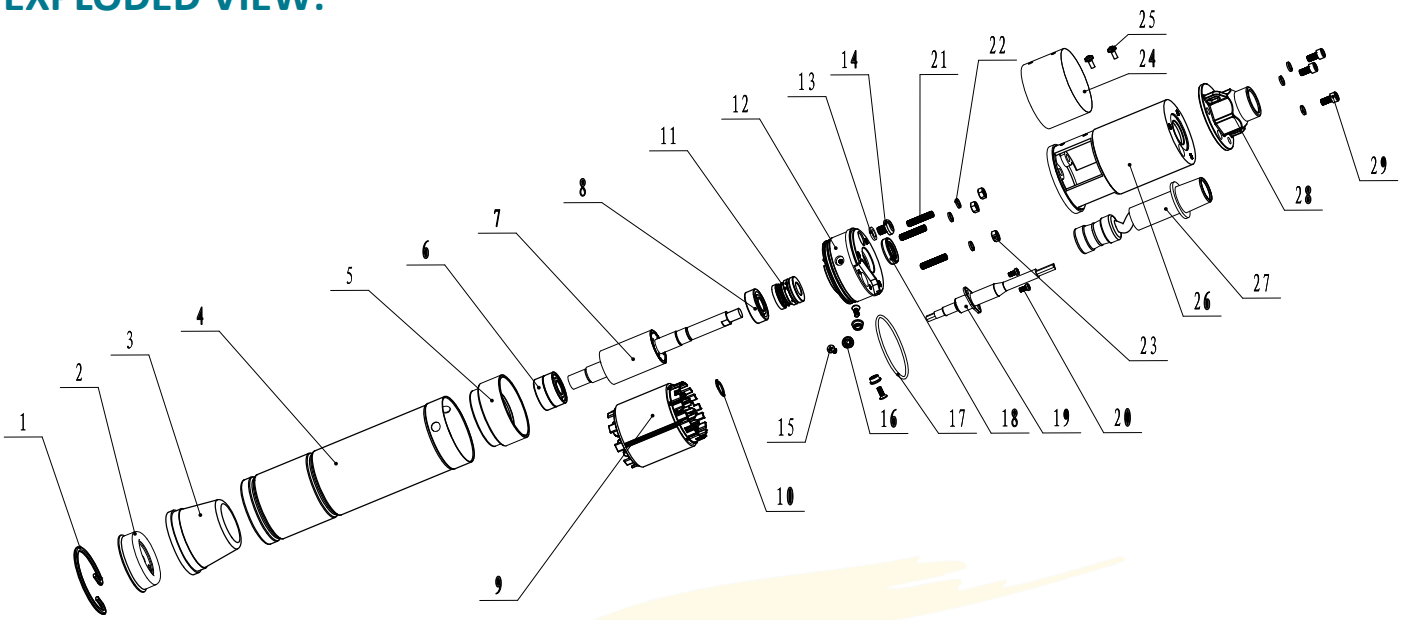

No	Part	Material	QTY	No	Part	Material	QTY
1	MOTOR BASE CIRCLIP	304SS	1	16	SEAL RING	SS304	3
2	MOTOR BASE	304SS	1	17	O RING	NBR	1
3	BLADDER	NBR	1	18	OIL SEAL	NBR	1
4	MOTOR CASING	SS304	1	19	CABLE GLAND		1
5	BOTTOM CHUCK	ALU	1	20	SCREW	SS304	2
6	BEARING	NSK	2	21	SCREW	SS304	1
7	ROTOR		1	22	SPRING WASHER	SS304	6
8	BEARING	NSK	1	23	NUTS	SS304	3
9	STATOR		1	24	STRAINER	SS304	1
10	CIRCLIP		1	25	SCREW	SS304	2
11	MECHANICAL SEAL	CAR/CER	1	26	PUMP CASING	SS304	1
12	OIL CYLINDER	SS304	1	27	HELICAL ROTOR		1
13	GASKET	NBR	1	28	OUTLET	SS304	1
14	SCREW	SS304	1	29	SCREW	SS304	3
15	SCREW	SS304	1				



3 HR 210-80

- Max Head
- Watt
- Model SS304
- Pump Diameter

BOREHOLE DC SOLAR
Control Panel



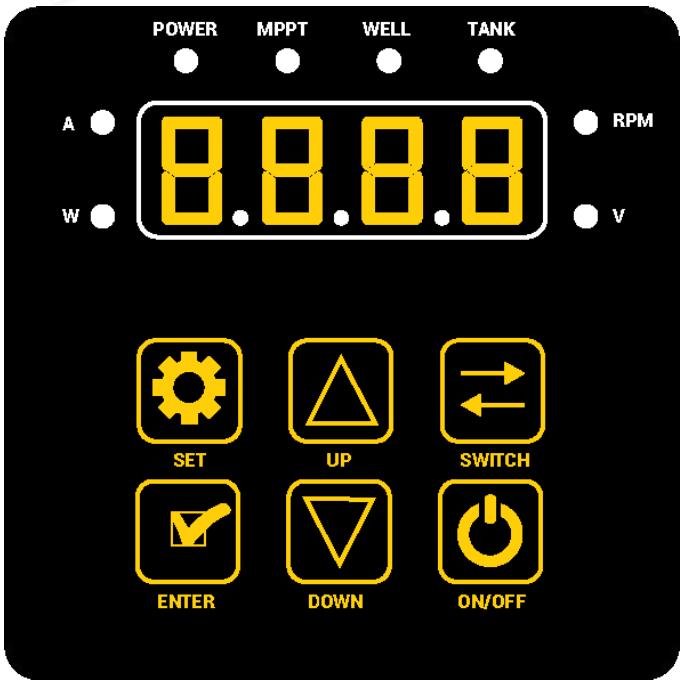

BOREHOLE DC SOLAR
Control Panel

Key	Function
Set	Factory setting. Do not open.
enter	Factory setting. Do not open
Up	RPM setting, to increase the RPM. In the Error State the key is used to turn the error display On or Off .
Down	RPM setting, to decrease RPM
Switch	In operation status this key is used to display the different values: Voltage | Speed | Current | Power
On/off	Power button - Switch unit On and Off manually.

Control Parameters:

Model	Pump Voltage	Max Input Current (A)	VOC (V)	Operating Voltage Range	Operating Temperature
CN24	24V	17	48V	21 - 48	-15°C - 60°C
CN48	48V	17	96V	42 - 96	-15°C - 60°C
CN72	72V	17	144V	63 - 144	-15°C - 60°C

Wiring Diagram:

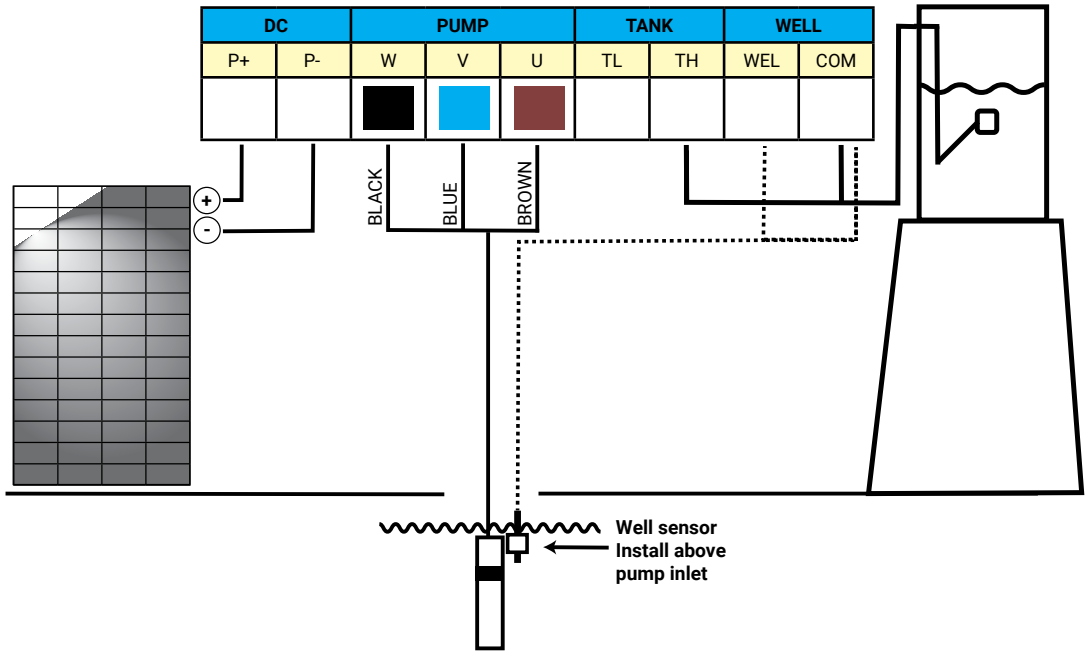

BOREHOLE DC SOLAR
Control Panel

Error Codes:

No	Code	Description	Cause	Solution	Recovery process
1	P0	Unit over-current	Incorrect motor voltage. UVW short circuit connection.	Replace with correct specification. Rewire according to diagram.	Automatically after 30sec.
2	P43	Phase protection	UVW open circuit.	Rewire according to diagram and ensure all wires are secured properly.	Automatically after 30sec.
3	P46	Operating protection	Incorrect motor cable Length. Pump bearing stuck.	Replace with correct specification. Decrease length or replace with larger diameter cable. (See Cable chart) Return unit to supplier for evaluation and repair.	Automatically after 30sec.
4	P49	Software over-current	Pump bearing stuck. UVW short circuit connection.	Return unit to supplier for evaluation and repair. Rewire according to diagram and ensure all wires are secured properly.	Automatically after 30sec.
5	P50	Low voltage protection	Low input voltage.	Check panel wiring and ensure panels provide sufficient voltage according to pump specification.	Immediately
6	P51	High voltage protection	Input voltage too high.	Check panel wiring and ensure panel voltage specification meets pump requirement.	Immediately
7	P48/E12	Dry-run protection	Water level below inlet of pump. Air trapped in pipework.	Lower the pump or wait until well refills. Switch unit off and wait for 30seconds.	Unit will automatically start after 30minutes.
8	P60	High temperature protection	High temperature protection.	Temperature of controller more than 90°C.	Unit will automatically start after temperature has stabilised.
9	E8	Current sampling failure		Switch power off and restart after 30 seconds.	Restart unit to clear error.
10	PL	Power shortage	PV Panel not receiving sufficient sunlight. PV Panels not wired correctly.	Unit will start up automatically as soon as sky clears. Check wiring and ensure that it is correct according to wiring diagram.	Unit will restart automatically after 30 seconds the first 5 times, there after it will restart after 30 minutes.
11	ALARM	Reverse wiring protection		Switch power off and rewire according to wiring diagram.	Alarm will not go off once wiring has been rectified.
12	E13	Tank Level	Tank Full / Empty	Switch pump off and restart after 30 seconds.	Automatically after 30 minutes.

DC Cable Chart: PV Panel to Control Box

Unit Voltage	Cable Length (m)											
	15	30	45	60	75	90	105	120	135	150	175	200
24V	4mm²	6mm²	10mm²	16mm²	16mm²	25mm²	25mm²	35mm²	35mm²	35mm²	50mm²	50mm²
48V	2.5mm²	4mm²	6mm²	10mm²	10mm²	16mm²	16mm²	25mm²	25mm²	25mm²	35mm²	35mm²
72V	2.5mm²	4mm²	6mm²	10mm²	10mm²	10mm²	10mm²	16mm²	16mm²	16mm²	25mm²	25mm²

AC Cable Chart: Control Box to Pump

		CABLE DIAMETER						
Watt		1.5 mm²	2.5 mm²	4 mm²	6 mm²	10 mm²	16 mm²	25 mm²
210	CABLE LENGTH		30	50	80	150		
300			70	120	180	310		
500			70	120	180	310		
750			110	180	280	380		
1200			110	180	280	380		